UNIVERSITY OF CAMBRIDGE INTERNATIONAL EXAMINATIONS
General Certificate of Education
Advanced Subsidiary Level and Advanced Level

CANDIDATE NAME	
CENTRE NUMBER	
CANDIDATE NUMBER	

9274888216

PHYSICS **9702/31**

Advanced Practical Skills 1 **May/June 2011**

2 hours

Candidates answer on the Question Paper.

Additional Materials: As listed in the Confidential Instructions.

READ THESE INSTRUCTIONS FIRST

Write your Centre number, candidate number and name on all work you hand in.
Write in dark blue or black pen.
You may use a soft pencil for any diagrams, graphs or rough working.
Do not use staples, paper clips, highlighters, glue or correction fluid.
DO **NOT** WRITE IN ANY BARCODES.

Answer **both** questions.
You will be allowed to work with the apparatus for a maximum of one hour for each question.
You are expected to record all your observations as soon as these observations are made, and to plan the presentation of the records so that it is not necessary to make a fair copy of them.
You may lose marks if you do not show your working or if you do not use appropriate units.

Additional answer paper and graph paper should be used only if it becomes necessary to do so.
You are reminded of the need for good English and clear presentation in your answers.

At the end of the examination, fasten all your work securely together.
The number of marks is given in brackets [ ] at the end of each question or part question.

For Examiner's Use	
1	
2	
Total	

This document consists of **9** printed pages and **3** blank pages.

© UCLES 2011

BLANK PAGE

© UCLES 2011

You may not need to use all of the materials provided.

For Examiner's Use

1 In this experiment you will investigate how the characteristics of a circuit vary with its resistance.

(a) Connect the circuit of Fig. 1.1.

You should expect to spend at least 15 minutes setting up your circuit.

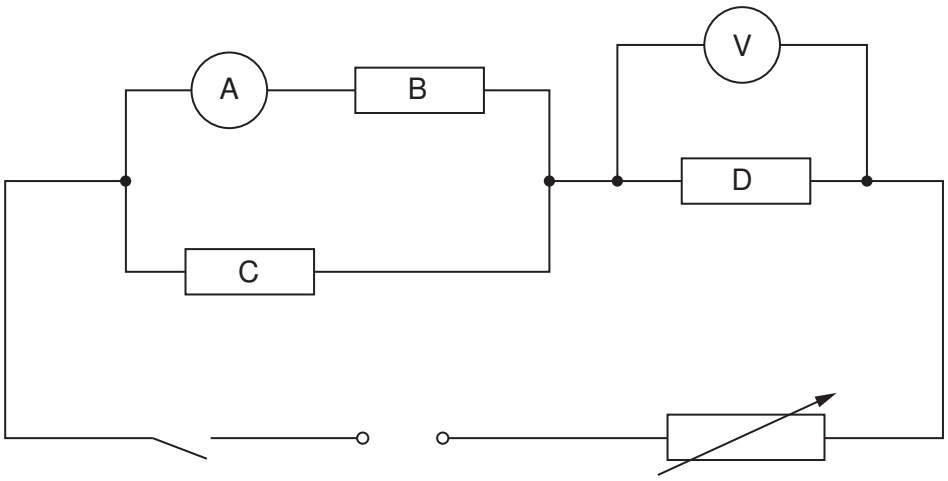

Fig. 1.1

(b) (i) Close the switch.

(ii) Adjust the variable resistor until the current reading is at a maximum.

(iii) Measure and record the ammeter reading I and the voltmeter reading V.

I = ...

V = ...

[2]

(c) Adjust the variable resistor and repeat **(b)(iii)** until you have six sets of values of I and V. Include values of $\frac{1}{I}$ and $\frac{1}{V}$ in your table.

For Examiner's Use

Open the switch when you have taken all your readings.

[10]

(d) **(i)** Plot a graph of $\frac{1}{I}$ on the y-axis against $\frac{1}{V}$ on the x-axis. [3]

(ii) Draw the straight line of best fit. [1]

(iii) Determine the gradient and the y-intercept of this line.

gradient = ...

y-intercept = ...

[2]

© UCLES 2011

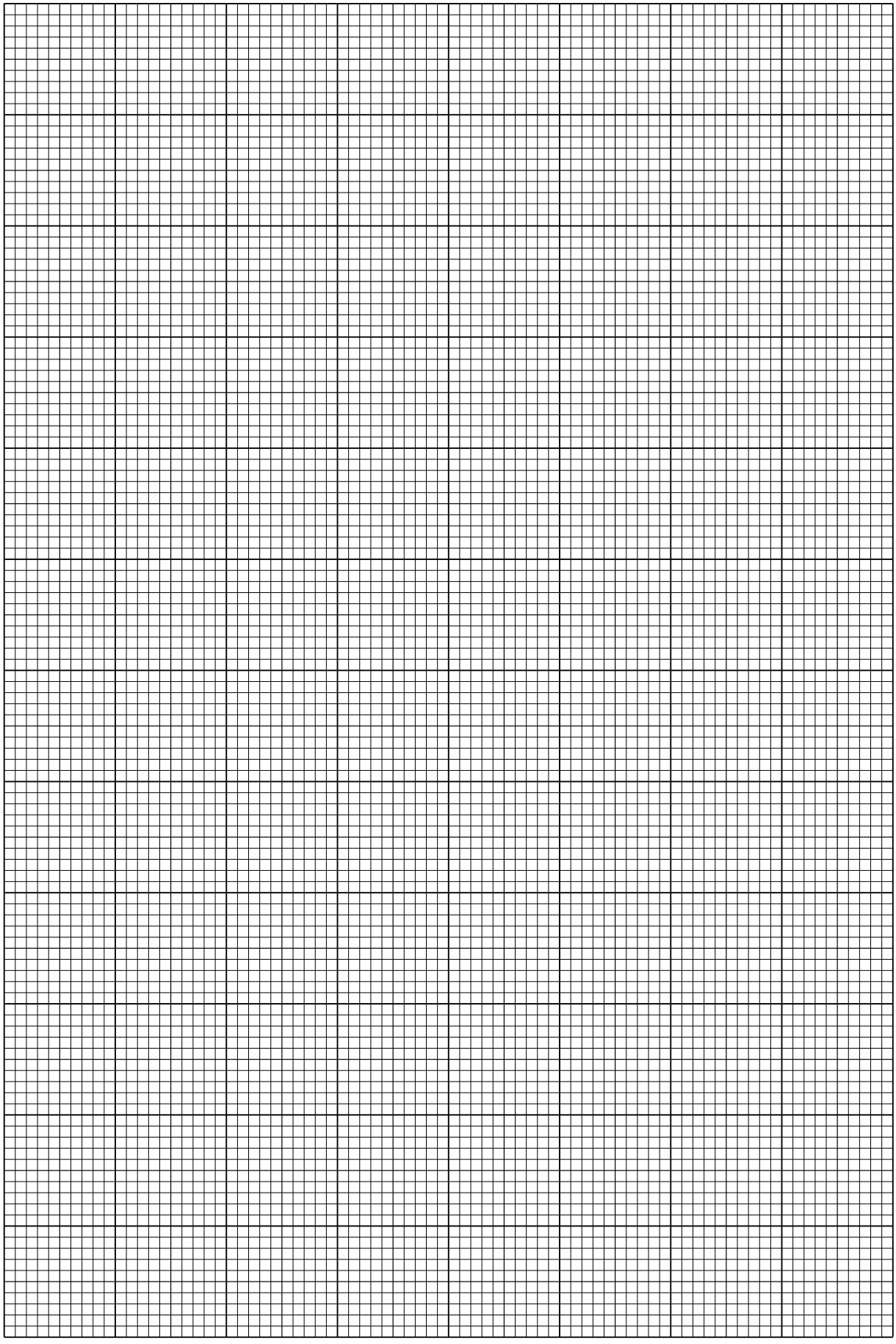

For Examiner's Use

(e) It is suggested that the quantities I and V are related by the equation

$$\frac{1}{I} = \frac{3R}{V} + k$$

where R and k are constants.

Use your answer in **(d)(iii)** to determine the value of R.
Give appropriate units.

For Examiner's Use

R = ... [2]

You may not need to use all of the materials provided.

For Examiner's Use

2 In this experiment you will investigate how the motion of a metre rule balanced on a cylinder depends on the diameter of the cylinder.

(a) Measure and record the thickness t of the metre rule.

t = ... [1]

(b) (i) Measure and record the diameter d of cylinder A.

d = ... [1]

(ii) Calculate w, where $w = d - t$.

w = ... [1]

(c) (i) Use modelling clay to secure cylinder A to the bench and balance the metre rule on the cylinder, as shown in Fig. 2.1.

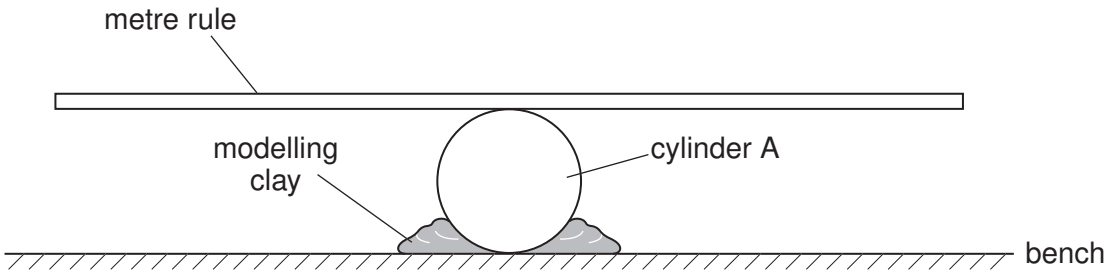

Fig. 2.1

For Examiner's Use

(ii) Move one end of the rule downwards.
Release the rule and watch the movement.
The end of the rule will move upwards and then downwards again, completing a swing as shown in Fig. 2.2.
The time taken for each complete swing is T.

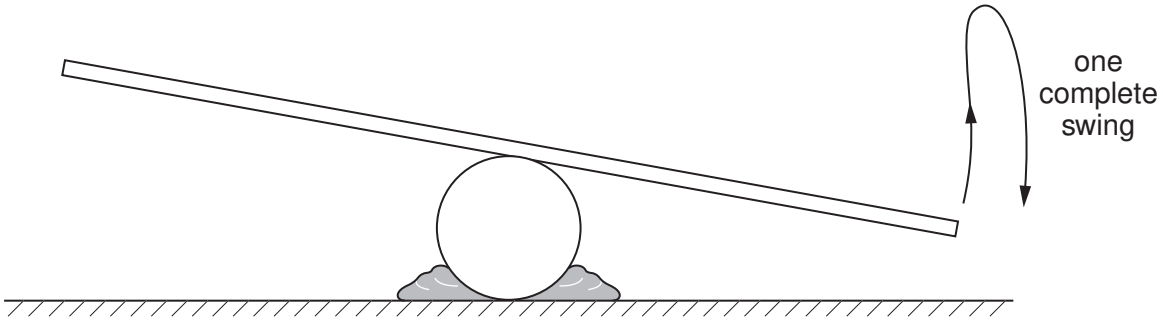

Fig. 2.2

By timing several of these complete swings, determine an accurate value for T.

T = ... [2]

(d) Estimate the percentage uncertainty in your value of T.

percentage uncertainty = ... [1]

© UCLES 2011

(e) Repeat **(b)** and **(c)** for cylinder B.

For Examiner's Use

d = ...

w = ...

T = ...

[4]

(f) It is suggested that the quantities T and w are related by the equation

$$T^2 = \frac{k}{w}$$

where k is a constant.

(i) Using your data, calculate two values of k.

first value of k = ...

second value of k = ...

[1]

(ii) Explain whether your results support the suggested relationship.

.....

.....

.....

.....[1]

For Examiner's Use

(g) (i) Describe four sources of uncertainty or limitations of the procedure for this experiment.

1. .....

.....

2. .....

.....

3. .....

.....

4. .....

.....

[4]

(ii) Describe four improvements that could be made to this experiment. You may suggest the use of other apparatus or different procedures.

1. .....

.....

2. .....

.....

3. .....

.....

4. .....

.....

[4]

© UCLES 2011

BLANK PAGE

BLANK PAGE

Permission to reproduce items where third-party owned material protected by copyright is included has been sought and cleared where possible. Every reasonable effort has been made by the publisher (UCLES) to trace copyright holders, but if any items requiring clearance have unwittingly been included, the publisher will be pleased to make amends at the earliest possible opportunity.

University of Cambridge International Examinations is part of the Cambridge Assessment Group. Cambridge Assessment is the brand name of University of Cambridge Local Examinations Syndicate (UCLES), which is itself a department of the University of Cambridge.

© UCLES 2011